FF-2098B-3

The FF-2098B-3 filter has been designed to operate with the Vicor VIPAC and to allow the MIL COTS VIPAC to meet the conducted emission requirements of Mil-Std-461D, E or F.

The standard filter has a chassis mount enclosure but the filter enclosure can be modified to add a connector input or other terminals to suit your requirements.

The leads are Teflon but can be changed if the Teflon is an issue.

The filter is lead free and RoHS.

Order P/N: FF-2098B-3 (STD)
FF-2098B-3HT (High Temp)

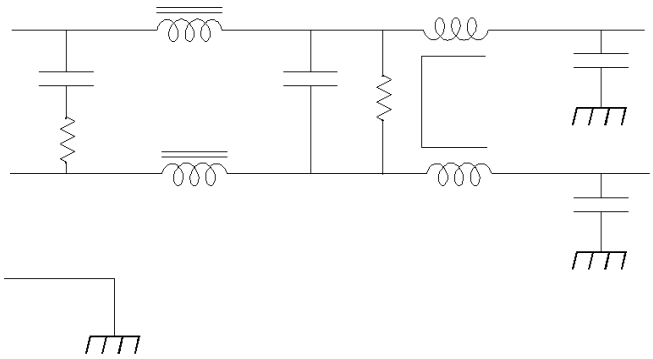

Operating Voltage: _____ 85 to 250 V
Operating Current: _____ 3 Amp
Operating Frequency: _____50/400 Hz
Operating Temperature, High: _____60℃
Operating Temperature, Low: _____-20ºC, Std
: _____ -40ºC, HT

Storage Temperature: _____-40ºC—100ºC
Diel. Withstanding (line - case): _____1500 Vac
Diel. Withstanding (line - line): _____1500 Vdc

Leakage Current: _____0.33 mA @ 220V, 60Hz
Max Residual Voltage after 1 sec: _____ 45 Volts
Calculated MTBF: _____4,585,894 Hrs @ 30℃ GB

INSERTION LOSS vs. FREQUENCY

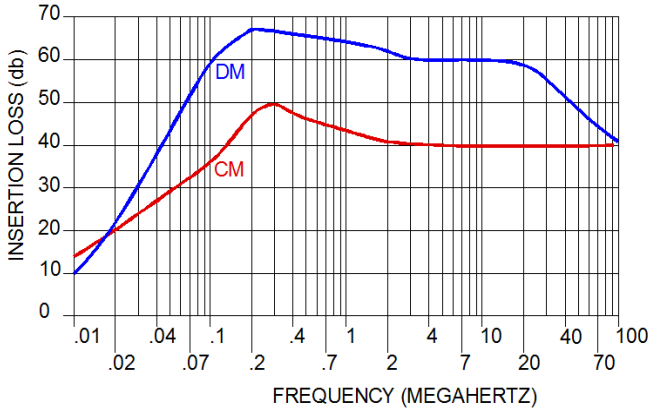

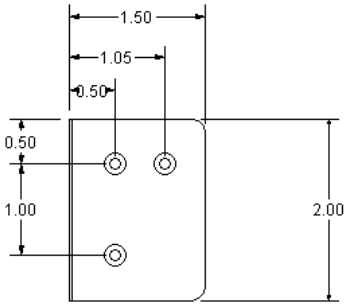

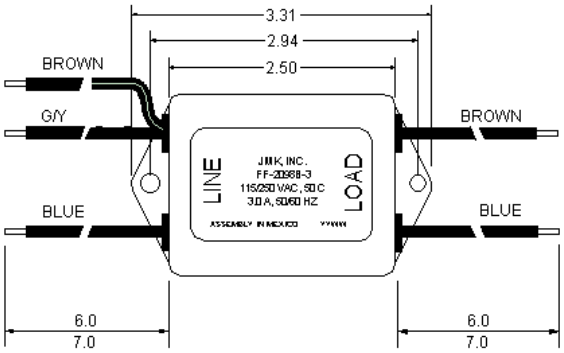

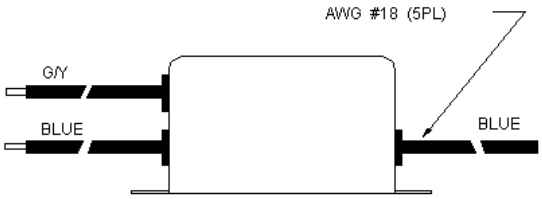

USA JMK Inc 15 Caldwell Dr. Amherst, NH 03031 PH: 603 886-4100 FX: 603 886-4115
email: info@jmkfilters.com
EUR JMK Inc Glasgow G13 1DN Scotland UK PH: 44-(0) 7785310729 Fax: 44-(0) 141 589 1884